RUTGERS

THE STATE UNIVERSITY OF NEW JERSEY

CS 516 Compilers and Programming Languages II

Solutions to Hard Compiler / Runtime Problems-2

Annoucements

New Project 1 deadline: Monday, April 6.

New Homework #3 deadline: Wednesday, April 8.

Video of last lecture available on sakai/Resources

Hard compiler / runtime problems

What is a hard compiler problem?

Answer: Problems that are NP-complete (non-deterministic polynomial)

Definition: A problem X is NP-complete iff
(1) X is in NP, and
(2) Every problem Y in NP can be reduced in polynomial time to X

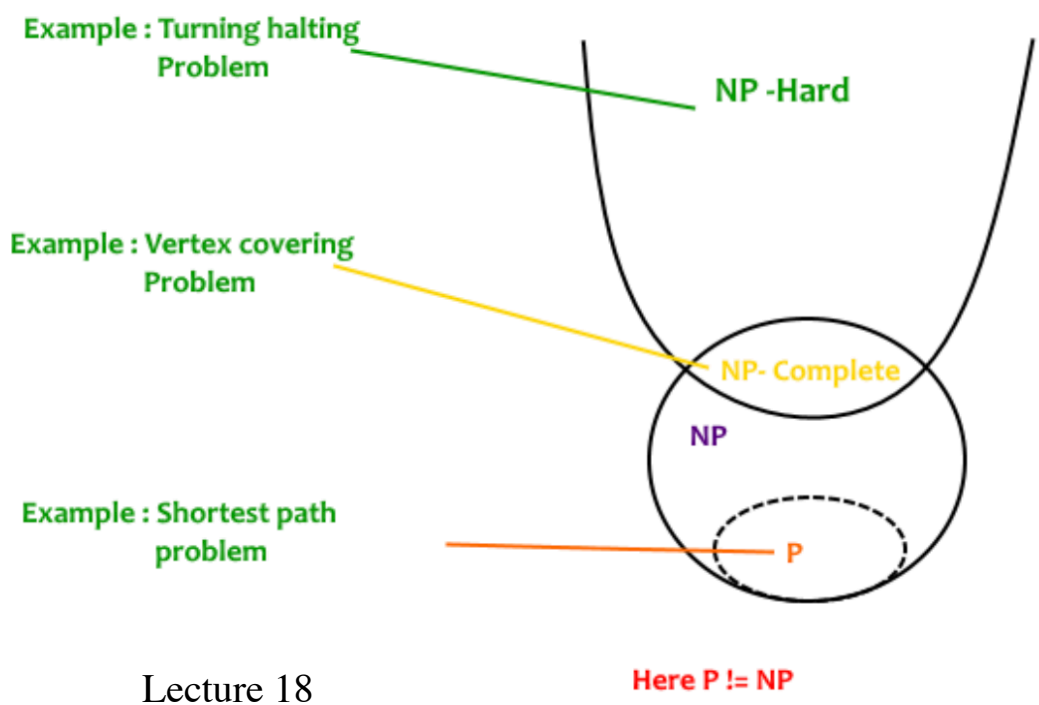

Hard compiler problems (cont.)

How to prove that a (decision) problem X is in NP-complete?

(1) Show that you can verify in polynomial time that a given solution/witness of X is valid (polynomial time verification)
(2) Show a polynomial time reduction of any instance of a existing/known NP-complete problem to an instance of X

Example "classical" NP-complete problems

- 3 SAT (3 Conjunctive Normal Form Satiability Problem)
- Traveling salesman
- Graph coloring
- Integer programming

Example "compiler" NP-complete problems

- Register allocation
- Instruction scheduling
- Automatic data layout

Hard compiler problems (cont.)

Example proof outline (Kremer1993/1995)

Theorem: Minimal cost dynamic data layout problem is NP-complete

Problem statement:

- Program consists of multiple phases
- Phases access multi-dimensional arrays
- Each array has a finite set of candidate layouts (by row, by column, blocked, …)
- Cost of array access in phase computation depends on array's layout
- Array remapping (e.g.: from row to column) may be performed between phases
- Remapping is not free, i.e., has a cost

Determine the layout of each array in each phase such that the overall computation and remapping costs are minimized.

8 phases, 3 arrays

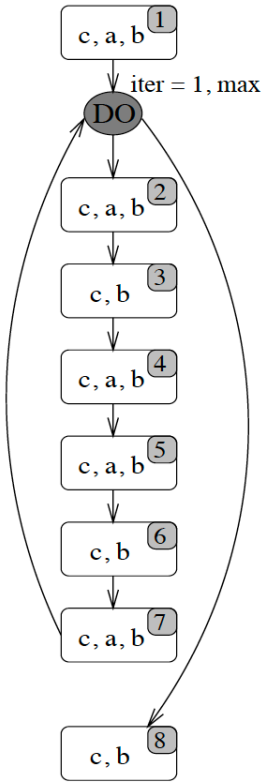

2 candidate layouts per array

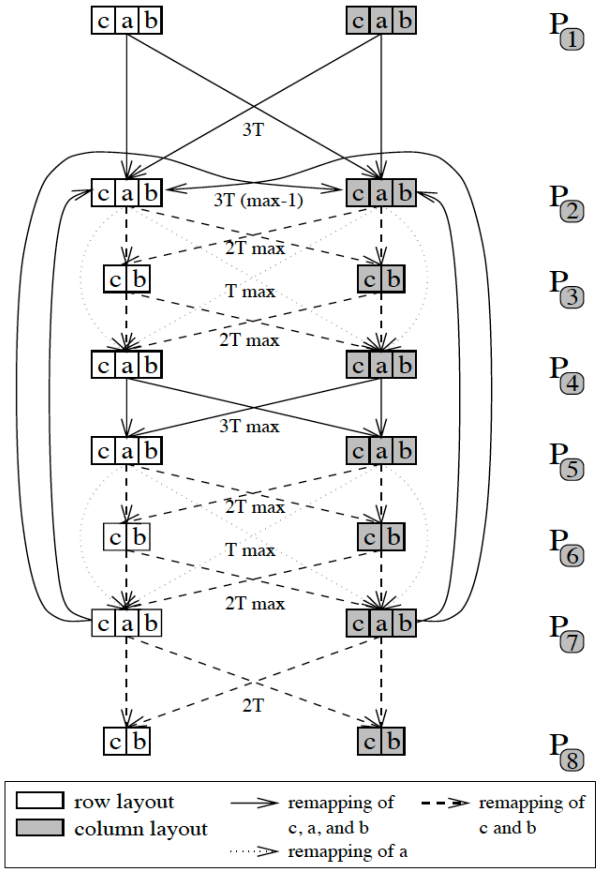

Hard compiler problems (cont.)

"Any advanced / interesting compiler optimization problem is NP-complete" (Keith Cooper, Rice University)

So what to do?

Option 1 (current wisdom): **Use a heuristic**
This can work well since problem instances that occur in practice may have structure, i.e., exhibit properties that may not lead to exponential cost.

Option 2: Use state-of-the-art integer programming tools
This will produce the optimal solution (no computation approximation). If there is structure in the problem, the solver will exploit it. If the optimal solution takes too long to compute, return the best feasible solution within a specified time budget (heuristic solution, if needed).

WE WILL USE OPTION 2. $\Rightarrow$ **GUROBI** - MIXED INTEGER PROGRAMMING TOOL

Mathematical optimization problem

$$\begin{aligned} \text{minimize/maximize:} \quad & f(x_1, x_2, \ldots, x_n) \\ \text{subject to:} \quad & g_i(x_1, x_2, \ldots, x_n) \begin{Bmatrix} \leq \\ \geq \\ = \end{Bmatrix} b_i, \quad \forall i \in \{1, \ldots, m\} \\ & x_j \geq 0, \quad \forall j \in \{1, \ldots, n\} \end{aligned}$$

- x_j are the *decision variables*.
- $g_i(x_1, x_2, \ldots, x_n) \begin{Bmatrix} \leq \\ \geq \\ = \end{Bmatrix} b_i$ are *structural constraints*.
- $x_j \geq 0$ are *nonnegativity constraints*.
- $f(x_1, \ldots, x_n)$ is the *objective function*.
- A *feasible solution*, $x = (x_1, \ldots, x_n)$ satisfies all constraints.
- The *feasible region* is the set of all feasible solutions.
- The objective function ranks the feasible solutions.

Math Programming (LP/MIP/ILP/0-1 ILP)

LP: Decision variables x_i have continuous values (e.g. floats)
MIP: Some decision variables x_i must have integral values (integers)
ILP: All decision variables x_i have integral values (integers)
0-1 ILP: All decision variables x_i are binary, i.e. 0 or 1

$$
\begin{aligned}
z^* = \text{minimize:} \quad & c_1x_1 + c_2x_2 + \cdots + c_nx_n \\
\text{subject to:} \quad & a_{i1}x_1 + a_{i2}x_2 + \cdots + a_{in}x_n \begin{Bmatrix} \leq \\ \geq \\ = \end{Bmatrix} b_i, \quad i = 1, \ldots, m \\
& x_1, x_2, \ldots, x_n \geq 0
\end{aligned}
$$

- a_{ij}, c_j, and b_i are data.
- Find x^* satisfying $c_1x_1^* + \cdots + c_nx_n^* \leq c_1\hat{x}_1 + \cdots + c_n\hat{x}_n$ for all feasible $\hat{x}$.
- A linear program (LP) is a special type of math program with:
  - $f(x_1, \ldots, x_n) = c_1x_1 + \cdots + c_nx_n$
  - $g_i(x_1, \ldots, x_n) = a_{i1}x_1 + \cdots + a_{in}x_n, \quad i = 1, \ldots, m$

Example: Food Diet Problem

Want to find a combination of foods (in ounces) that satisfies my nutrient requirements while keeping the overall cost minimal.

	nutrients per ounce		per ounce
Food	#1	#2	Cost
1	2	0	20
2	0	1	10
3	3	2	31
4	1	2	11
5	2	1	12

Nutrient requirements:
#1: 21, #2: 12

- Decision Variables
  - x_j = # of ounces of food type $j = 1, 2, \ldots, 5$
- Objective Function
  - minimize

cost $20x_1 + 10x_2 + 31x_3 + 11x_4 + 12x_5$

- Structural Constraints

Nutr #1 ▸ $2x_1 + 0x_2 + 3x_3 + 1x_4 + 2x_5 \geq 21$

Nutr #2 ▸ $0x_1 + 1x_2 + 2x_3 + 2x_4 + 1x_5 \geq 12$

- Nonnegativity constraints
  - $x_j \geq 0, j = 1, 2, \ldots, 5$

gurobi on ilab / your own machine

Gurobi – state-of-the-art mixed integer programming tool

Installed on ilab machines, but need to set path:
if you are running BASH: (most people), type this on the terminal:
source /koko/system/gurobi901/gurobi.bash

To run a python gurobi interpreter, type: **gurobi.sh**

You may obtain individual educational/academic licenses directly at gurobi.com for your own laptop. There are online tutorials at gurobi.com. and youtube. Search for "Getting started with gurobi" (part 1 through 3).

On the ilab machines, you can find gurobi "program" examples at
/koko/system/gurobi901/linux64/examples

Example: Food Diet Problem

Food	#1	#2	Cost
1	2	0	20
2	0	1	10
3	3	2	31
4	1	2	11
5	2	1	12

Nutrient requirements:
#1: 21, #2: 12

- Decision Variables
  - x_j = # of ounces of food type $j = 1, 2, \ldots, 5$
- Objective Function
  - minimize $20x_1 + 10x_2 + 31x_3 + 11x_4 + 12x_5$
- Structural Constraints
  - $2x_1 + 0x_2 + 3x_3 + 1x_4 + 2x_5 \geq 21$
  - $0x_1 + 1x_2 + 2x_3 + 2x_4 + 1x_5 \geq 12$
- Nonnegativity constraints
  - $x_j \geq 0, j = 1, 2, \ldots, 5$

Gurobi lp format:
file **FoodDietProblem.lp**

```
Minimize
  20 food.1 + 10 food.2 + 31 food.3 + 11 food.4 + 12 food.5
Subject To
  nutrient.1: 2 food.1 + 3 food.3 + food.4 + 2 food.5 >= 21
  nutrient.2: food.2 + 2 food.3 + 2 food.4 +   food.5 >= 12
Bounds
  food.1 >= 0
  food.2 >= 0
  food.3 >= 0
  food.4 >= 0
  food.5 >= 0
Integers
  food.1 food.2 food.3 food.4 food.5
End
```

Example: Food Diet Problem

gurobi.sh (python gurobi shell):

```
m = read('FoodDietProblem.lp')
m.optimize()
m.write('FoodDietProblem.sol')
```

Gurobi lp format:
file **FoodDietProblem.lp**

```
Minimize
  20 food.1 + 10 food.2 + 31 food.3 + 11 food.4 + 12 food.5
Subject To
  nutrient.1: 2 food.1 + 3 food.3 + food.4 + 2 food.5 >= 21
  nutrient.2: food.2 + 2 food.3 + 2 food.4 +   food.5 >= 12
Bounds
  food.1 >= 0
  food.2 >= 0
  food.3 >= 0
  food.4 >= 0
  food.5 >= 0
Integers
  food.1 food.2 food.3 food.4 food.5
End
```

Example: Food Diet Problem

gurobi.sh (python gurobi shell):

```
m = read('FoodDietProblem.lp')
m.optimize()
m.write('FoodDietProblem.sol')
```

Gurobi lp format:
file **FoodDietProblem.lp**

```
Minimize
  20 food.1 + 10 food.2 + 31 food.3 + 11 food.4 + 12 food.5
Subject To
  nutrient.1: 2 food.1 + 3 food.3 + food.4 + 2 food.5 >= 21
  nutrient.2: food.2 + 2 food.3 + 2 food.4 +   food.5 >= 12
Bounds
  food.1 >= 0
  food.2 >= 0
  food.3 >= 0
  food.4 >= 0
  food.5 >= 0
Integers
  food.1 food.2 food.3 food.4 food.5
End
```

Linux prompt:

```
[uli@ls data]$ more FoodDietProblem.sol
# Objective value = 131
food.1 0
food.2 0
food.3 0
food.4 1
food.5 10
[uli@ls data]$
```

Solutions to hard compiler problems

Option 1 (current wisdom): **Use a heuristic**
This can work well since problem instances that occur in practice may have structure, i.e., exhibit properties that may not lead to exponential cost.

Option 2: Use state-of-the-art integer programming tools
This will produce the optimal solution (no computation approximation). If there is structure in the problem, the solver will exploit it. If the optimal solution takes too long to compute, return the best feasible solution within a specified time budget (family of heuristic solutions).

Solution strategy for hard problem X:
Reduce / Map instance of problem X to a linear programming problem and solve it via gurobi

Solutions to hard compiler/runtime problems

Solution strategy for hard problem X:
Reduce / map instance of problem X to a linear programming problem and solve it via gurobi

Many compiler / runtime problems can be expressed as minimal / maximal solutions to weighted graph problems.

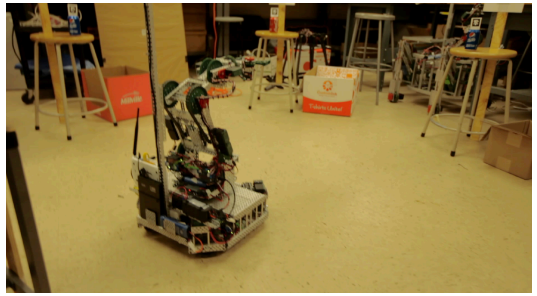

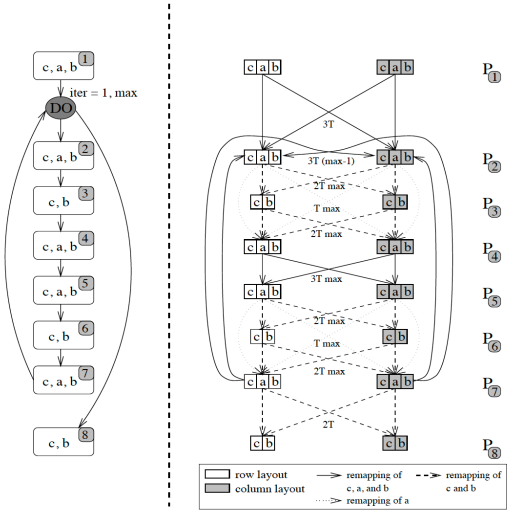

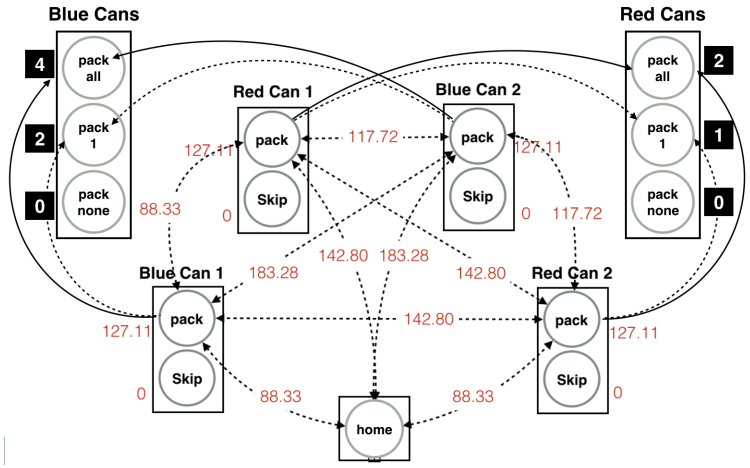

automatic data layout problem

Soda can selection problem under resource constraints and quality weights (service robot)

Solutions to hard compiler/runtime problems

Solution strategy for hard problem X:
Reduce / map instance of problem X to a linear programming problem and solve it via gurobi

Reduction example: Reduce instance of a data layout problem to a 0-1 linear integer programming problem (0-1 problem).

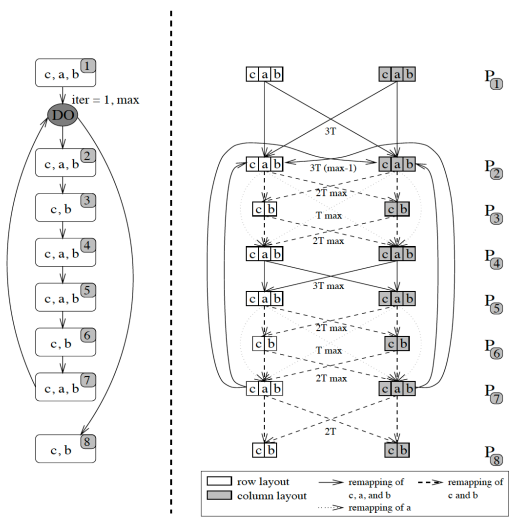

automatic data layout problem

0-1 linear integer programming problem:

- Decision variables are binary (0 or 1)
- Constraints and objective functions are linear

Solutions to hard compiler/runtime problems

Solution strategy for hard problem X:
Reduce / map instance of problem X to a linear programming problem and solve it via gurobi

Reduction example: Reduce instance of a data layout problem to a 0-1 linear integer programming problem (0-1 problem).

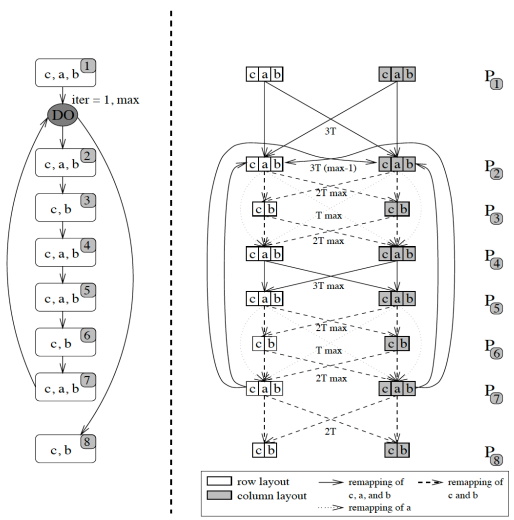

Construction:

- One variable x_i for each node and x_j for each edge
- Objective function: SUM $cost_i * x_i$ + SUM $cost_j * x_j$
- Two types of constraints:
  layout and **remapping** constraints
- There are many possible reductions (translations)
- Particular constraint formulations can result in significantly different solution times

automatic data layout problem

Solutions to hard compiler/runtime problems

Solution strategy for hard problem X:
Reduce / map instance of problem X to a linear programming problem and solve it via gurobi

layout constraints:
Ensure that a single layout has to be selected for each phase

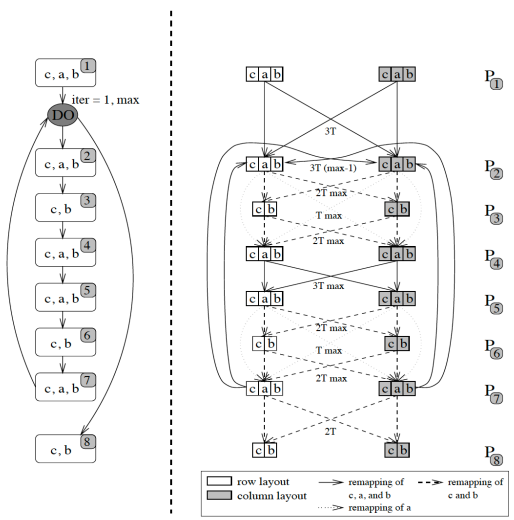

automatic data layout problem

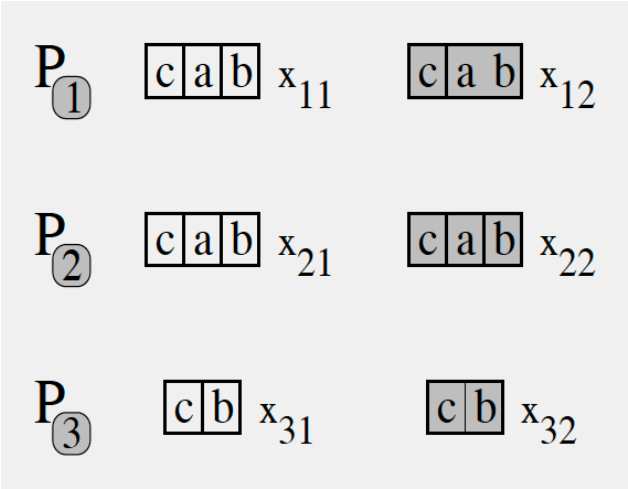

layout.1: $x_{11} + x_{12} = 1$

layout.2: $x_{21} + x_{22} = 1$

layout.3: $x_{31} + x_{32} = 1$

Layout constraints for first three phases

Solutions to hard compiler/runtime problems

Solution strategy for hard problem X:
Reduce / map instance of problem X to a linear programming problem and solve it via gurobi

remapping constraints:
Ensure that if an edge's source an sink node is selected, the incident edge has to be selected as well

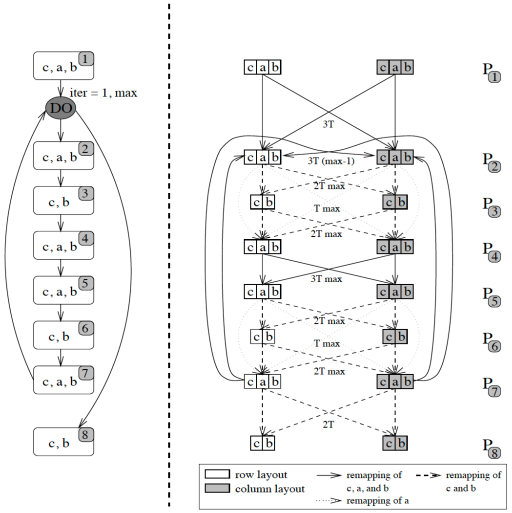

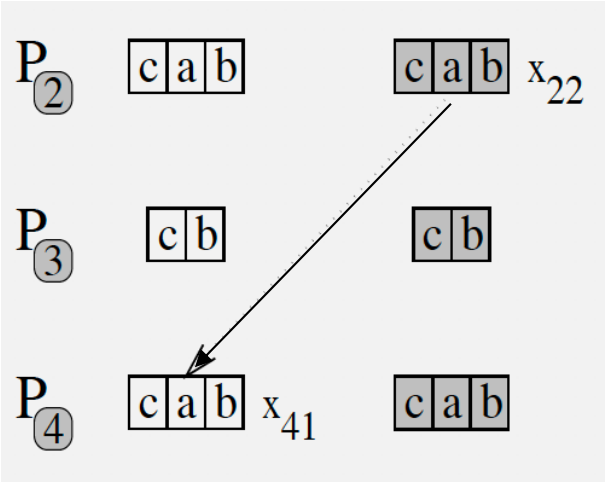

Remapping edge for array "a" between P_2 and P_4 represented by decision variable

x^{22}_{41}

remap: $x_{22} * x_{41} = x^{22}_{41}$

automatic data layout problem

Solutions to hard compiler/runtime problems

Solution strategy for hard problem X:
Reduce / map instance of problem X to a linear programming problem and solve it via gurobi

remapping constraints:
Ensure that if an edge's source an sink node is selected, the incident edge has to be selected as well

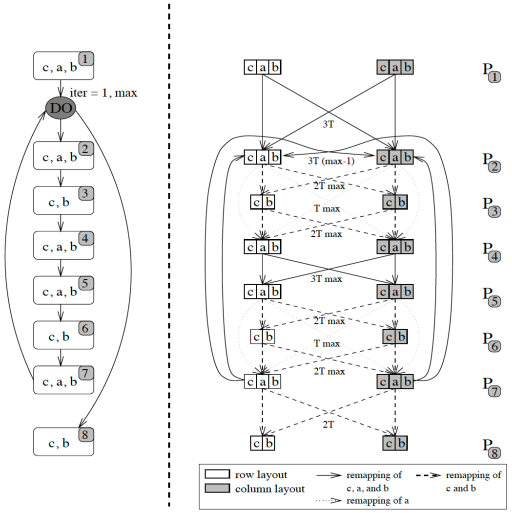

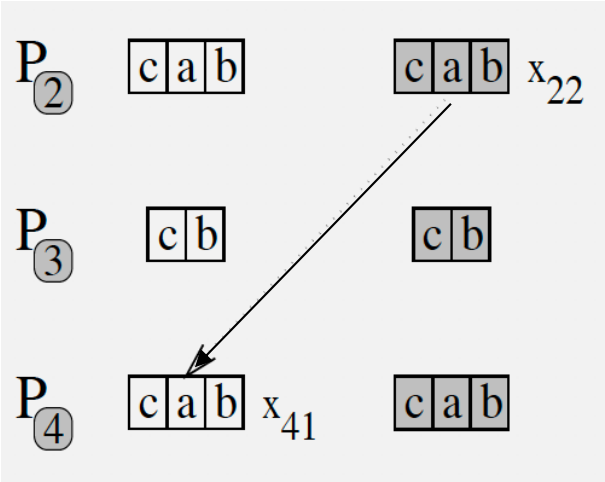

Remapping edge for array "a" between P_2 and P_4 represented by decision variable x^{22}_{41}

remap: $\cancel{x_{22} * x_{41}} = x^{22}_{41}$

DOES NOT WORK SINCE NOT A LINEAR CONSTRAINT!

automatic data layout problem

Solutions to hard compiler/runtime problems

Solution strategy for hard problem X:
Reduce / map instance of problem X to a linear programming problem and solve it via gurobi

remapping constraints:
Ensure that if an edge's source an sink node is selected, the incident edge has to be selected as well

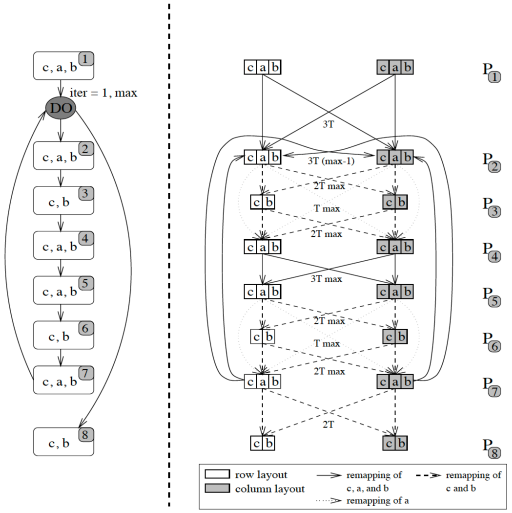

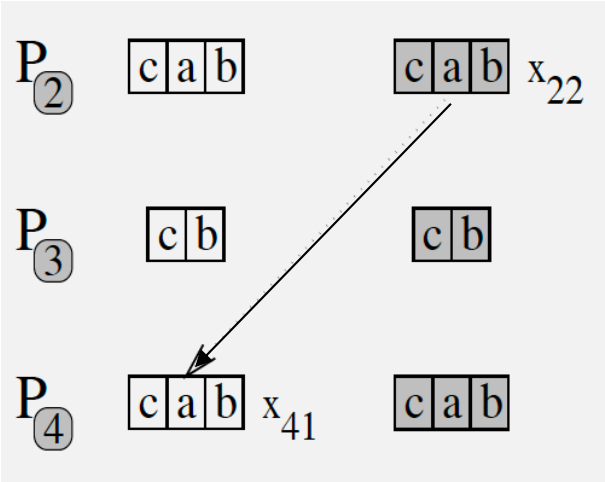

Remapping edge for array "a" between P_2 and P_4 represented by decision variable

$$x^{22}_{41}$$

r.1: $x_{22} + x_{41} >= 2 * x^{22}_{41}$
r.2: $x_{22} + x_{41} <= 1 + x^{22}_{41}$

automatic data layout problem

THIS WORKS BUT IS NOT EFFICIENT (LONG SOLUTION TIMES)!

Summary

- By reducing a hard compiler / runtime system problem to an integer programming problem, you can exploit decades in R&D in solving problems through integer programming. Many research groups use this technology.

- The particular translation, i.e., linear programming formulation is typically not unique. Efficiency of solution depends on formulations, with possibly orders of magnitude difference in solution time.

- Number of variables and constraints (size of the problem formulation) does not directly reflect the time needed to solve the problem.(*)

- Tools such as gurobi can generate families of heuristics such as
  - return first feasible solution found
  - return best feasible solution within a time constraint (e.g.: 2 secs)
  - return first solution within x% of optimal

(*) In my experience, it often takes longer to read /communicate the problem to gurobi than actually solving it.